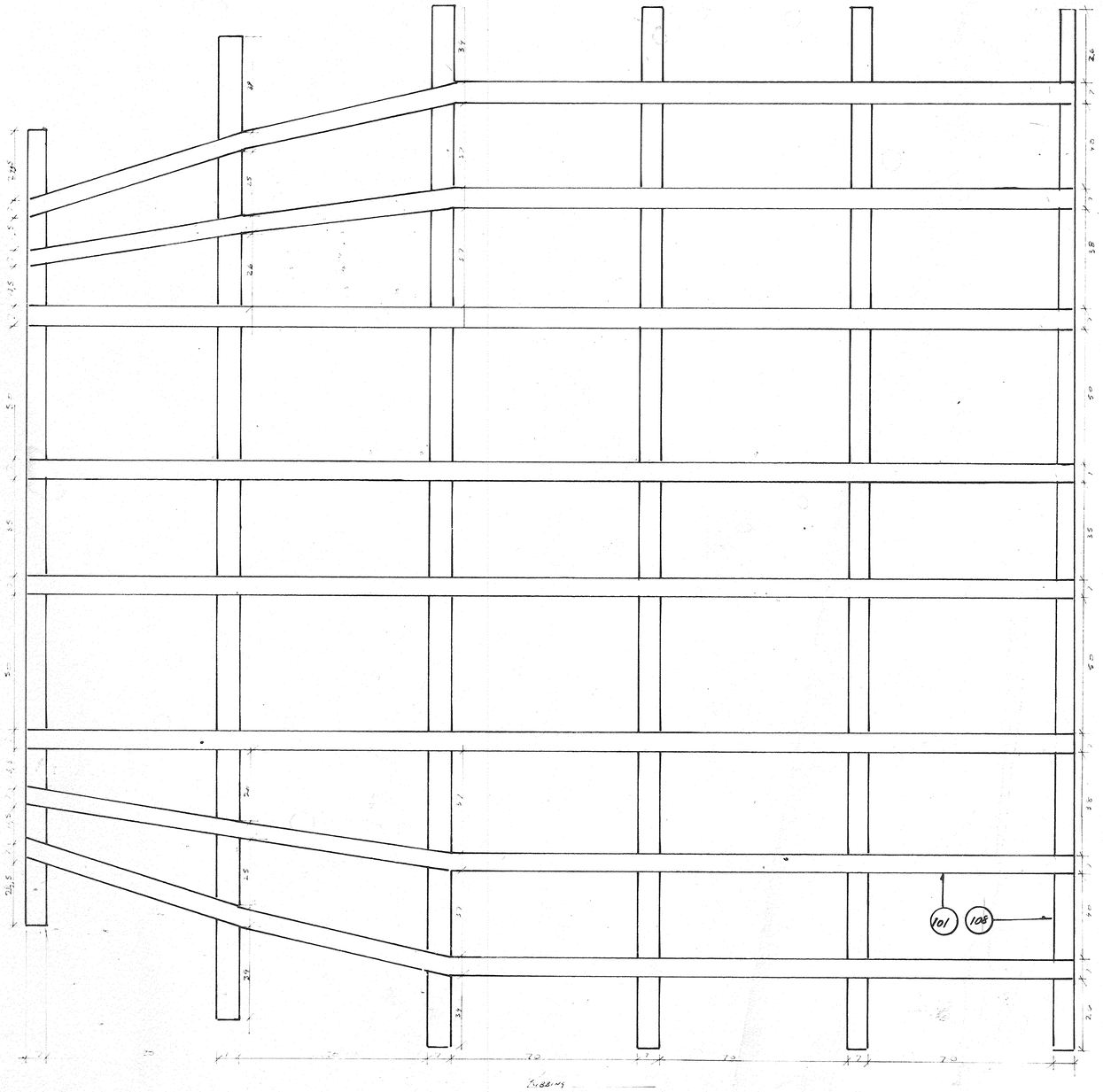

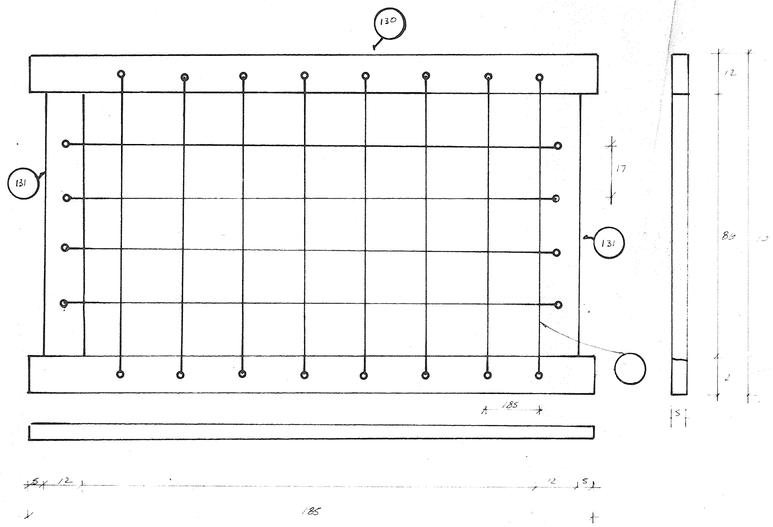

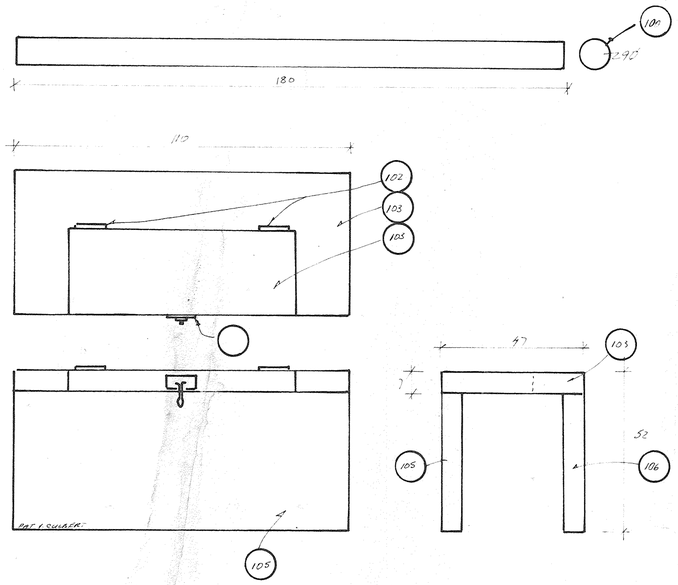

Streepno Dash No	ITEM No	DEEL No PART No	BESKRYWING DESCRIPTION	MATERIAAL MATERIAL	SPES. SPEC.	AFWERK FINISH	GETAL No REQ.

585 DE BEER STREET JOHANNESBURG TRANSVAAL 0084						
UITG. ISSUE	DATUM DATE	MODIFIKASIE OF WYSIGING MOD. OR AMENDMENT	GOEDG APPR.	TENSY ANDERS VERMELD IS AFMETINGE IN MM. EN IS PERKE: ±0,25 HOEKE: ± ½° UNLESS OTHERWISE SPECIFIED DIMENSIONS ARE IN MM. & LIMITS ARE: ±0,25 ANGULAR: ± ½°	SAMESTEL ASSEMBLY	GETAL No REQ.
GETEKEN DRAWN		NAGETREK TRACED		TIPE TYPE	SKAAL SCALE 10	
NAGESIEN CHECKED		OFF. TEG. ENG. OFF.		TITEL TITLE 16 SPAN JAW BOWL SIX WASH.		
		GOEDGEKEUR APPR.				