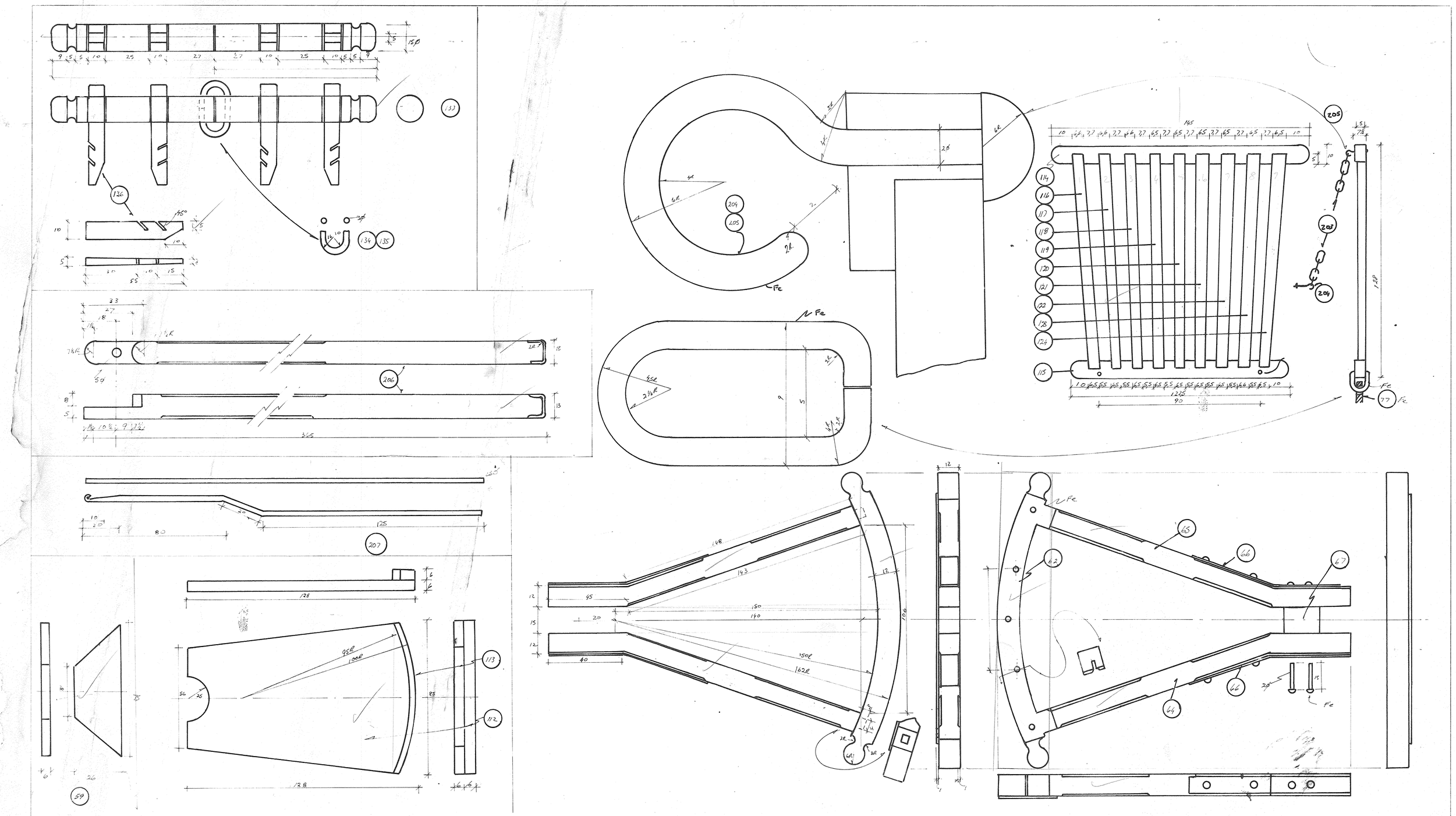

StreepNo Dash No	ITEM No.	DEEL No PART No	BESKRYWING DESCRIPTION	MATERIAAL MATERIAL	SPES. SPEC.	AFWERK FINISH	GETAL No REQ.

585 De Beer Street, Wonderboom South
Pretoria 0084

TENSY ANDERS VERMELD IS AFMETINGS IN MM. EN IS PERKE: ±0,25 HOEKE: ± ½°

UNLESS OTHERWISE SPECIFIED DIMENSIONS ARE IN MM. & LIMITS ARE: ±0,25 ANGULAR: ± ½°

UITG. ISSUE	DATUM DATE	MODIFIKASIE OF WYSIGING MOD. OR AMENDMENT	GOEDG APPR.	SAMESTEL ASSEMBLY	GETAL No. REQ.

GETEKEN DRAWN	Pari Lubbert	NAGETREK TRACED	TIPE TYPE
NAGESIEN CHECKED		OFF. TEG. ENG. OFF.	TITEL TITLE 12 Span Jan Bone Ox wagon
		GOEDGEKEUR APPR.	SKAAL SCALE 1/10