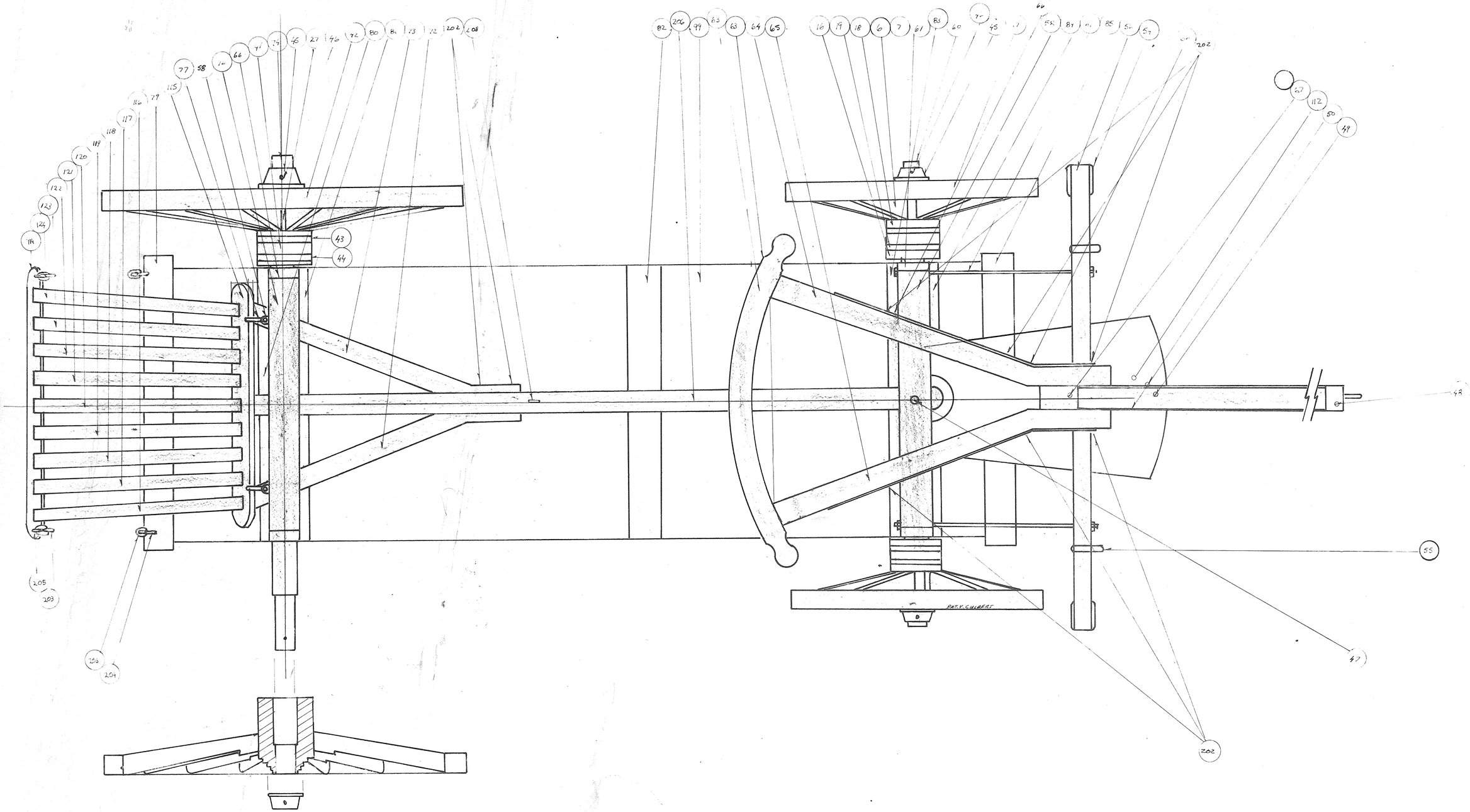

Streep No. Dash No.	ITEM No.	DEEL No. PART No.	BESKRYWING DESCRIPTION	MATERIAAL MATERIAL	SPES. SPEC.	AFWERK FINISH	GETAL No. REQ.

585 De Beer St. Wonderboom South
Pretoria 0084

UITG. ISSUE	DATUM DATE	MODIFIKASIE OF WYSIGING MOD. OR AMENDMENT	GOEDG APPR.

TENSY ANDERS VERMELD IS AFMETINGE IN MM. EN IS PERKE: ± 0,25 HOEKE: ± ½°
UNLESS OTHERWISE SPECIFIED DIMENSIONS ARE IN MM. & LIMITS ARE: ± 0,25 ANGULAR: ± ½°

GETEKEN DRAWN	P. V. Culbert	NAGETREK TRACED	
NAGESIEN CHECKED		OFF. TEG. ENG. OFF.	
		GOEDGEKEUR APPR.	

TIPE TYPE
TITEL TITLE 16 STAN Tow Bowl
De Jongh

SAMESTEL ASSEMBLY
GETAL No. REQ.
SKAAL SCALE 1/10