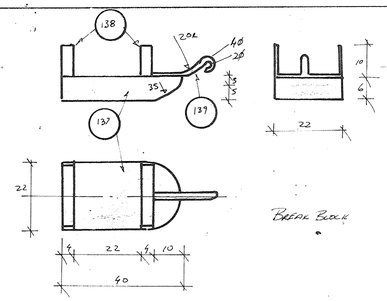

BREAK BLOCK

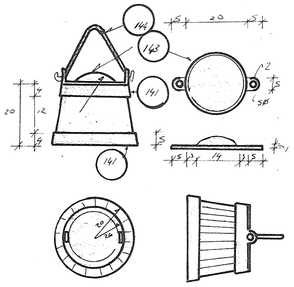

BUCKET

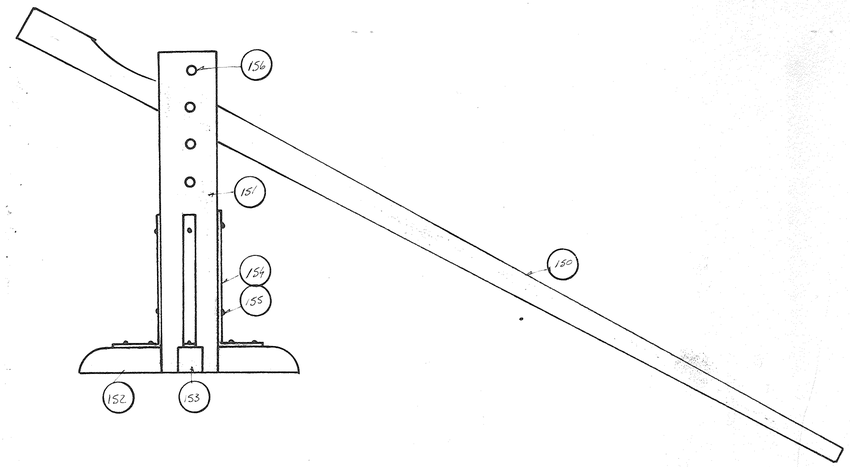

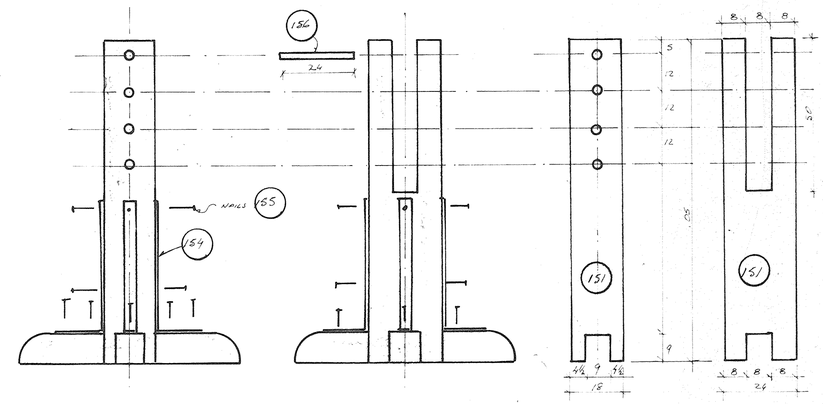

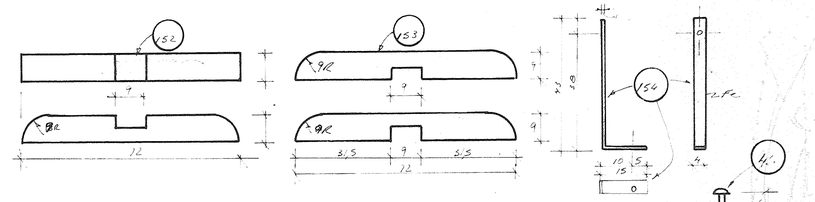

COTTER PIN

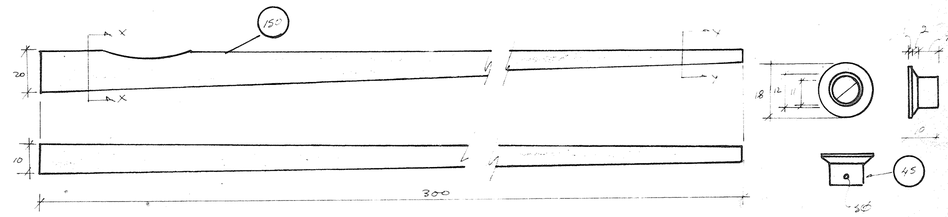

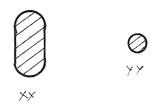

585 De Beer Street, Wonderboompoort
Pretoria 0084

UITG. ISSUE	DATUM DATE	MODIFIKASIE OF WYSIGING MOD. OR AMENDMENT	GOEDG APPR.

TENSY ANDERS VERMELD IS AFMETINGS IN MM. EN IS PERKE: ±0,25 HOEKE: ± ½°

UNLESS OTHERWISE SPECIFIED DIMENSIONS ARE IN MM. & LIMITS ARE: ±0,25 ANGULAR: ± ½°

GETEKEN DRAWN	Pieter Luber	NAGETREK TRACED	TIPE TYPE
NAGESIEN CHECKED		OFF. TEG. ENG. OFF.	TITEL TITLE
		GOEDGEKEUR APPR.	

SAMESTEL ASSEMBLY	GETAL No. REQ.
SKAAL SCALE	1/10